Work Order ID 65574

January 20, 2011 9:14:07 AM

Item ID: D3536-11
Revision ID:
Item Name: Gasket
Start Date: 1/20/11 **Start Qty:** 6.00
Required Date: 2/04/11 **Req'd Qty:** 6.00
Reference:

Accept

Setup Start
Stop

Cust Item ID:
Customer:

Run Start
Stop

Approvals: **Process Plan:** CL **Date:** 11/01/20 **Tooling:** _____ **Date:** _____
QC: _____ **Date:** _____ **SPC (Y/N):** _____ **Date:** _____

Sequence ID/ Work Center ID	Operation Description	Set Up/ Run Hours	Tool ID	Tool #	Plan Code	Accept Qty	Reject Qty	Reject Number	Insp. Stamp
Draw Nbr	**Revision Nbr**								
D3536	Rev A								
100	FLOW WATER JET	0.00							
Waterjet						1811-1-27			
	Memo	0.00							
FLOW CNC Waterjet	1-Cut as per Dwg D3536 ☐Dwg Rev: A ☐Prog Rev: A ☐2- Deburr if necessary								12
110	QC2- Inspect parts off machine FAI/FAIB	0.00							
QC						1811-1-27			
	Memo	0.00							
Quality Control									
120	QC8- Inspect parts - second check	0.00							
QC						112			
	Memo	0.00 Sulor/27							
Quality Control									

Dart Aerospace Ltd

W/O:		WORK ORDER CHANGES					
DATE	STEP	PROCEDURE CHANGE	By	Date	Qty	Approval Chief Eng / Prod Mgr	Approval QC Inspector

Part No: _____ **PAR #:** _____ **Fault Category:** _____ **NCR:** Yes No **DQA:** _____ **Date:** _____

Resolution: _____ **Disposition:** _____ **QA: N/C Closed:** _____ **Date:** _____

NCR:		WORK ORDER NON-CONFORMANCE (NCR)						
DATE	STEP	Description of NC Section A	Corrective Action Section B			Verification Section C	Approval Chief Eng	Approval QC Inspector
			Initial Chief Eng	Action Description Chief Eng	Sign & Date			

NOTE: Date & initial all entries

H:\fFORMS\Quality Assurance\approved QA\NCRWO RevE

Picklist Print

January 20, 2011 9:14:06 AM

Work Order ID: 65574

Parent Item: D3536-11

Parent Item Name: Gasket

Start Date: 1/20/11 **Required Date:** 2/04/11

Start Qty: 6.00 **Required Qty:** 6.00

Comments: IPP Rev:A New Issue 07-02-14 JLM

Component Item ID/ Item Name	Replacement Item ID	Mfg/ Purch	Bin Item	Primary Location	Last Location	Route Seq ID	Unit of Measure	Qty on Hand	Qty per Kit	Total Qty	Qty Issued	Date Issued	Status
MNEO60S.063 NEOPRENE SHEET 0.063		Purchased	No			100	sf	321.3220	0.6728	4.485333			

B11-1-07

Location	Loc Qty	Loc Code
MAT	321.322	
115500	74.522	
115916	246.8	

115916

12

Dart Aerospace Ltd

W/O:		WORK ORDER CHANGES					
DATE	STEP	PROCEDURE CHANGE	By	Date	Qty	Approval Chief Eng / Prod Mgr	Approval QC Inspector

Part No: _____ **PAR #:** _____ **Fault Category:** _____ **NCR:** Yes No **DQA:** _____ **Date:** _____

Resolution: _____ **Disposition:** _____ **QA: N/C Closed:** _____ **Date:** _____

NCR:		WORK ORDER NON-CONFORMANCE (NCR)						
DATE	STEP	Description of NC Section A	Corrective Action Section B			Verification Section C	Approval Chief Eng	Approval QC Inspector
			Initial Chief Eng	Action Description Chief Eng	Sign & Date			

NOTE: Date & initial all entries

H:\fFORMS\Quality Assurance\approved QA\NCRWO RevE

DART AEROSPACE LTD	Work Order:	65574
Description: Gasket	Part Number:	D3536-11
Inspection Dwg: D3536 Rev: A		Page 1 of 1

FIRST ARTICLE INSPECTION CHECKLIST

[X] First Article [ ] Prototype

Drawing Dimension	Tolerance	Actual Dimension	Accept	Reject	Method of Inspection	Comments
26.65	+/-0.030	26.65	✓		T HB01	
23.15	+/-0.030	23.15	✓		T	
21.15	+/-0.030	21.15	✓		T	
17.65	+/-0.030	17.65	✓		T	
13.40	+/-0.030	13.46	✓		T	
9.15	+/-0.030	9.15	✓		T	
5.65	+/-0.030	5.65	✓		T	
3.90	+/-0.030	3.90	✓		T	
8.00	+/-0.030	8.00	✓		T	
14.00	+/-0.030	14.00	✓		T	
1.89	+/-0.030	1.880	✓		V HB02	
0.30	+/-0.030	.301	✓		V	
0.30	+/-0.030	.300	✓		V	
Ø0.19	+0.005/-0.001	.191	✓		V	

Measured by:	HB	Audited by:		Prototype Approval:	N/A
Date:	11-1-07	Date:	11/01/07	Date:	N/A

Rev	Date	Change	Revised by	Approved
A	09.05.07	New Issue	KJ/EC	

DESIGN	DRAWN BY	DART AEROSPACE USA, INC. PORT HADLOCK, WA	
CB	CB		
CHECKED	APPROVED	DRAWING NO.	REV. A
PH		D3536	SHEET 1 OF 6
DATE		TITLE	SCALE
06.10.25		GASKET	1:10
A	06.10.25	NEW ISSUE	

RELEASED
09.02.12

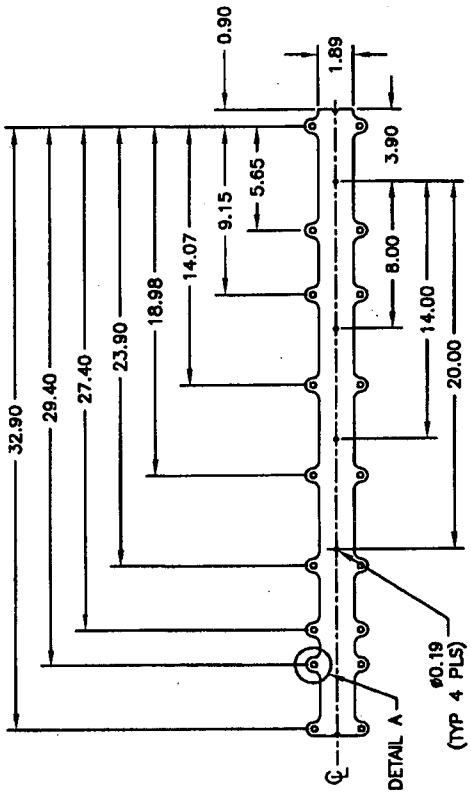

D3536-13 GASKET

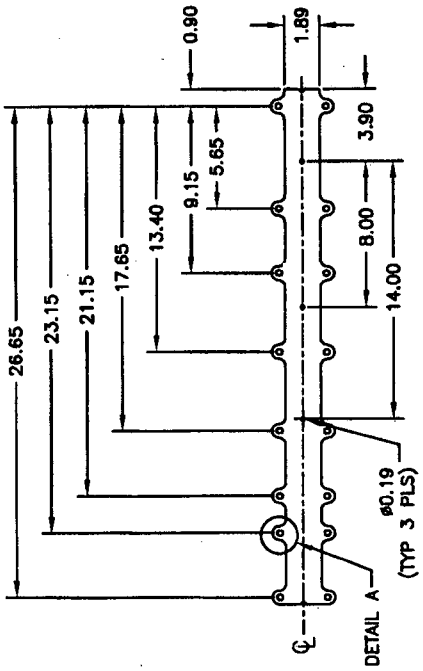

D3536-11 GASKET

SHOP COPY
RETURN TO
ENGINEERING
UNCONTROLLED COPY
SUBJECT TO AMENDMENT
WITHOUT NOTICE
WORK ORDER
NO. 65574
CL 11/01/20

NOTES
1) MATERIAL: BLACK NEOPRENE SHEET, 1/16 THICK, 60 DUROMETER (REF DART SPEC. M-NE060-S.063)
2) FINISH: NONE
3) PART IS SYMMETRICAL ABOUT ℄
4) TOLERANCES ARE PER DART QSI 018 UNLESS OTHERWISE NOTED
5) ALL DIMENSIONS ARE IN INCHES
6) IDENTIFY WITH DART P/N USING A WHITE FINE POINT PERMANENT INK MARKER
7) SEE PAGE 6 FOR DETAILS AND SECTION

DESIGN	DRAWN BY	DART AEROSPACE USA, INC. PORT HADLOCK, WA	REV. A
CB	CB		
CHECKED	APPROVED	DRAWING NO. D3536	SHEET 2 OF 6
DATE 06.10.25		TITLE GASKET	SCALE 1:10

RELEASED
07.02.12

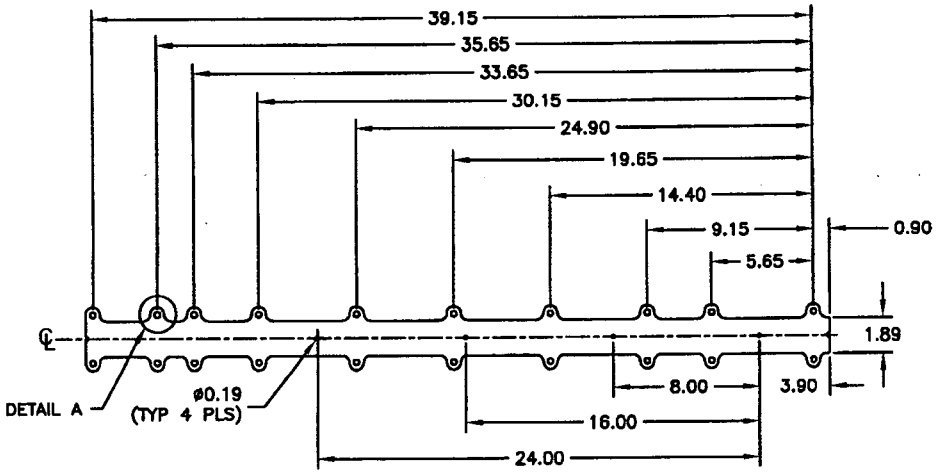

D3536-15 GASKET

SHOP COPY
RETURN TO
ENGINEERING
UNCONTROLLED COPY
SUBJECT TO AMENDMENT
WITHOUT NOTICE
WORK ORDER
NO. 63551

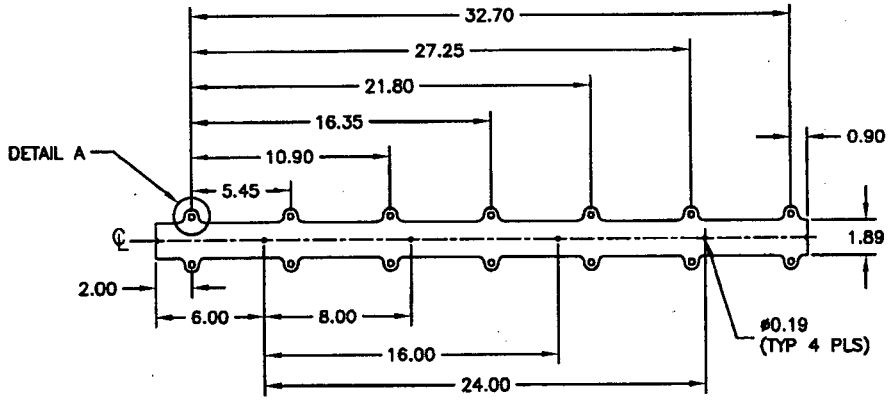

D3536-21 GASKET

NOTES

1) MATERIAL: BLACK NEOPRENE SHEET, 1/16 THICK, 60 DUROMETER (REF DART SPEC. M-NE060-S.063)
2) FINISH: NONE
3) PART IS SYMMETRICAL ABOUT ℄
4) TOLERANCES ARE PER DART QSI 018 UNLESS OTHERWISE NOTED
5) ALL DIMENSIONS ARE IN INCHES
6) IDENTIFY WITH DART P/N USING A WHITE FINE POINT PERMANENT INK MARKER
7) SEE PAGE 6 FOR DETAILS AND SECTION

DESIGN	DRAWN BY	DART AEROSPACE USA, INC. PORT HADLOCK, WA
CB	CB	
CHECKED	APPROVED	DRAWING NO. D3536 — REV. A
DATE 06.10.25		SHEET 3 OF 6
		TITLE GASKET — SCALE 1:10

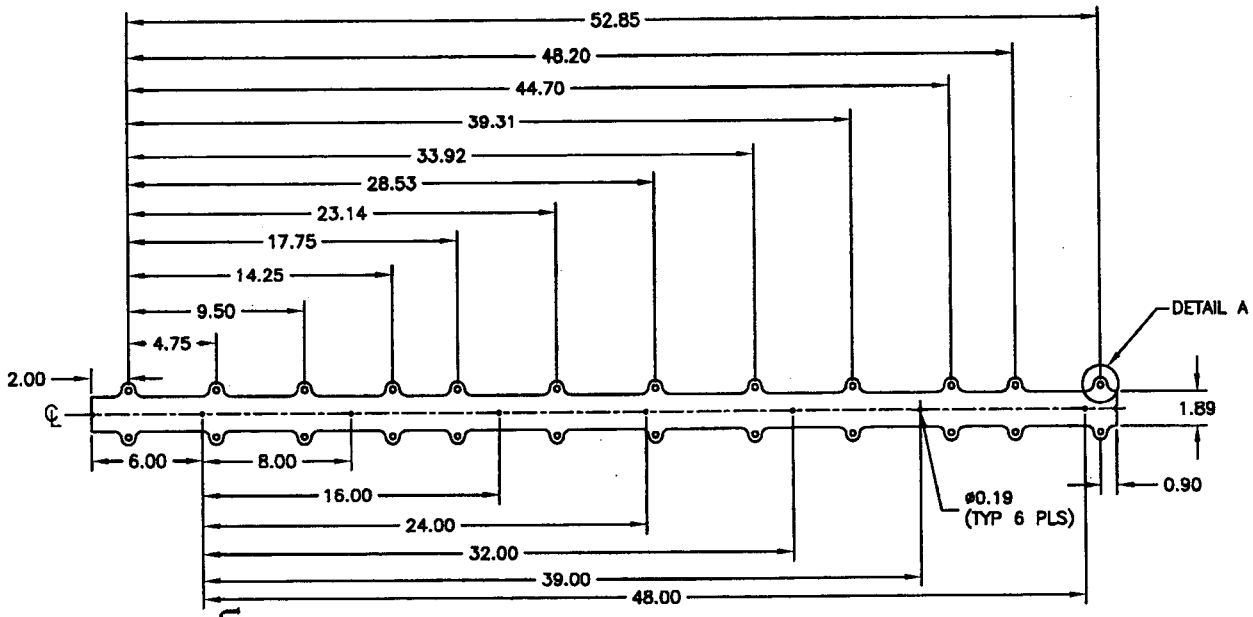

D3536-23 GASKET

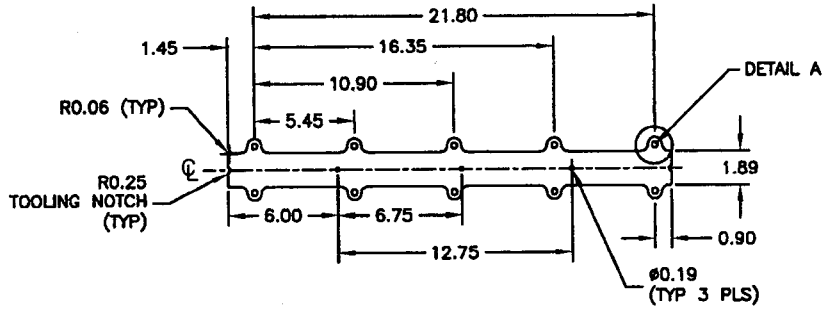

D3536-25 GASKET

NOTES

1) MATERIAL: BLACK NEOPRENE SHEET, 1/16 THICK, 60 DUROMETER (REF DART SPEC. M-NE060-S.063)
2) FINISH: NONE
3) PART IS SYMMETRICAL ABOUT ℄
4) TOLERANCES ARE PER DART QSI 018 UNLESS OTHERWISE NOTED
5) ALL DIMENSIONS ARE IN INCHES
6) IDENTIFY WITH DART P/N USING A WHITE FINE POINT PERMANENT INK MARKER
7) SEE PAGE 6 FOR DETAILS AND SECTION

DESIGN	DRAWN BY	DART AEROSPACE USA, INC.	
CB	CB	PORT HADLOCK, WA	REV. A
CHECKED	APPROVED	DRAWING NO.	SHEET 4 OF 6
		D3536	
DATE		TITLE	SCALE
06.10.25		GASKET	1:10

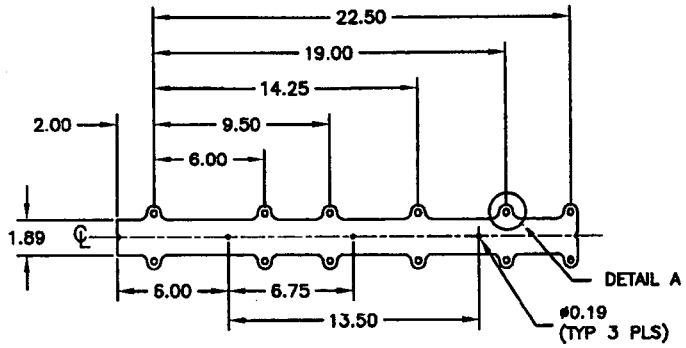

D3536-31 GASKET

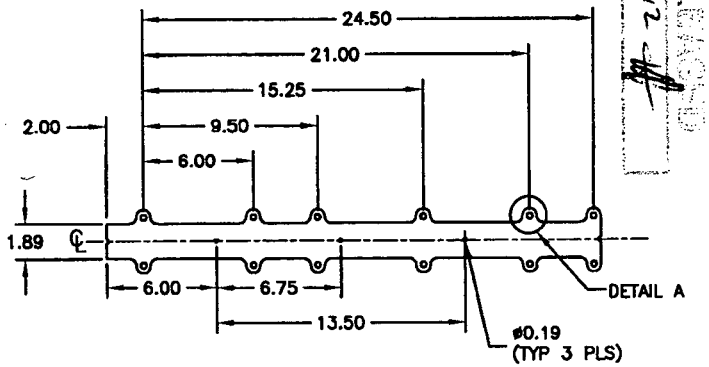

D3536-33 GASKET

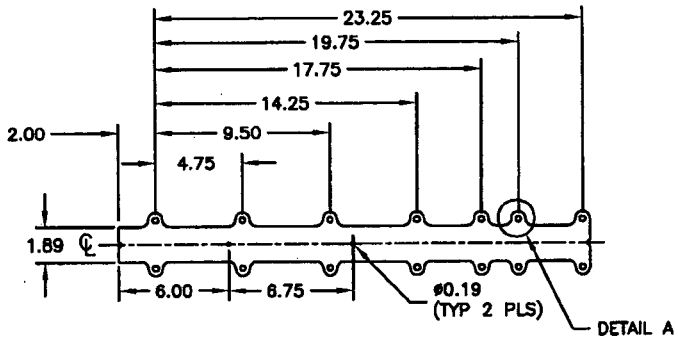

D3536-35 GASKET

SHOP COPY
RETURN TO
ENGINEERING
UNCONTROLLED COPY
SUBJECT TO AMENDMENT
WITHOUT NOTICE
WORK ORDER
NO. 65574

NOTES

1) MATERIAL: BLACK NEOPRENE SHEET, 1/16 THICK, 60 DUROMETER (REF DART SPEC. M-NE060-S.063)
2) FINISH: NONE
3) PART IS SYMMETRICAL ABOUT ℄
4) TOLERANCES ARE PER DART QSI 018 UNLESS OTHERWISE NOTED
5) ALL DIMENSIONS ARE IN INCHES
6) IDENTIFY WITH DART P/N USING A WHITE FINE POINT PERMANENT INK MARKER
7) SEE PAGE 6 FOR DETAILS AND SECTION

DESIGN	DRAWN BY	DART AEROSPACE USA, INC.	
CB	CB	PORT HADLOCK, WA	
CHECKED	APPROVED	DRAWING NO.	REV. A
PH		D3536	SHEET 5 OF 6
DATE		TITLE	SCALE
06.10.25		GASKET	1:10

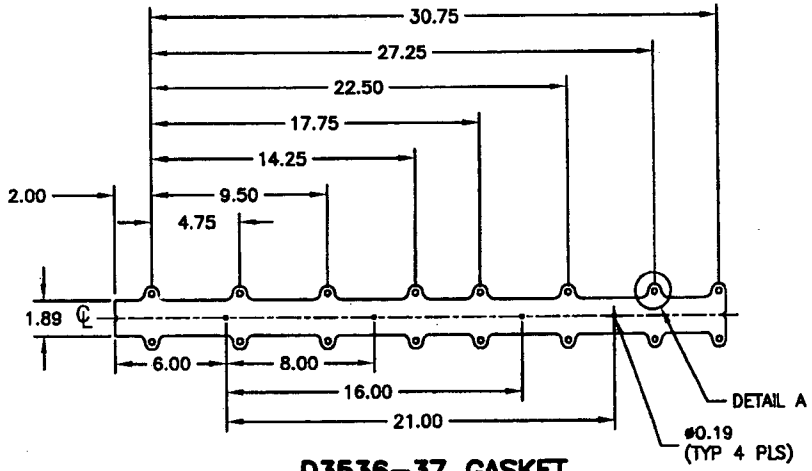

D3536-37 GASKET

SHOP COPY
RETURN TO
ENGINEERING
UNCONTROLLED COPY
SUBJECT TO AMENDMENT
WITHOUT NOTICE
WORK ORDER
NO. 65574

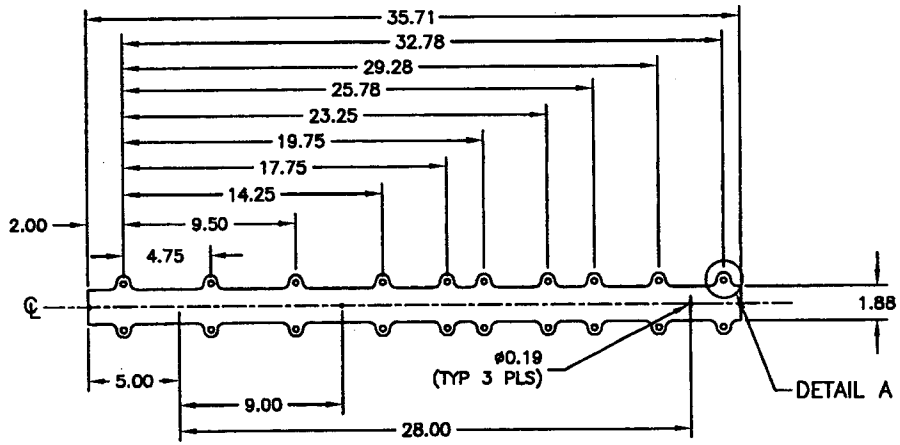

D3536-39 GASKET

NOTES

1) MATERIAL: BLACK NEOPRENE SHEET, 1/16 THICK, 60 DUROMETER (REF DART SPEC. M-NE060-S.063)
2) FINISH: NONE
3) PART IS SYMMETRICAL ABOUT ℄
4) TOLERANCES ARE PER DART QSI 018 UNLESS OTHERWISE NOTED
5) ALL DIMENSIONS ARE IN INCHES
6) IDENTIFY WITH DART P/N USING A WHITE FINE POINT PERMANENT INK MARKER
7) SEE PAGE 6 FOR DETAILS AND SECTION

DESIGN	DRAWN BY	DART AEROSPACE USA, INC. PORT HADLOCK, WA	
CB	CB		
CHECKED	APPROVED	DRAWING NO.	REV. A
PH		D3536	SHEET 6 OF 6
DATE		TITLE	SCALE
06.10.25		GASKET	1:10

RELEASED
07.02.12

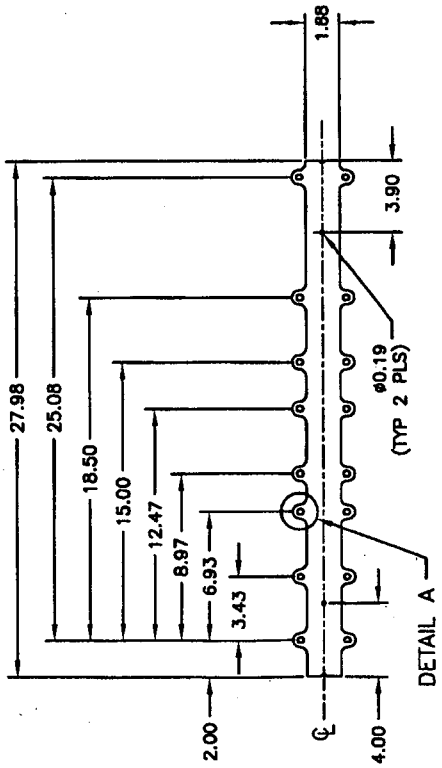

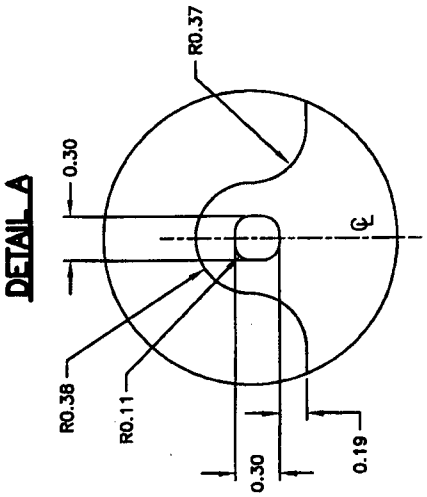

D3536-41 GASKET

SHOP COPY
RETURN TO
ENGINEERING
UNCONTROLLED COPY
SUBJECT TO AMENDMENT
WITHOUT NOTICE
WORK ORDER
NO. 65594

NOTES

1) MATERIAL: BLACK NEOPRENE SHEET, 1/16 THICK, 60 DUROMETER (REF DART SPEC. M-NE060-S.063)
2) FINISH: NONE
3) PART IS SYMMETRICAL ABOUT ℄
4) TOLERANCES ARE PER DART QSI 018 UNLESS OTHERWISE NOTED
5) ALL DIMENSIONS ARE IN INCHES
6) IDENTIFY WITH DART P/N USING A WHITE FINE POINT PERMANENT INK MARKER